Western Products, PO Box 245038, Milwaukee, WI 53224-9538 • www.westernplows.com

July 15, 2026
Lit. No. 43763, Rev. 07

Hopper and Drive Components

Striker™ Hopper Spreader with Gasoline Engine

#99032-1, 99033-1, 99036-1, 99037-1, 99040-1, 99041-1, 99043-1, 99044-1, 99046-1, 99047-1

Parts List

This Parts List is for WESTERN® Striker hopper spreaders with serial numbers beginning with 170711 and higher.

A DIVISION OF DOUGLAS DYNAMICS, LLC

HOPPER COMPONENTS

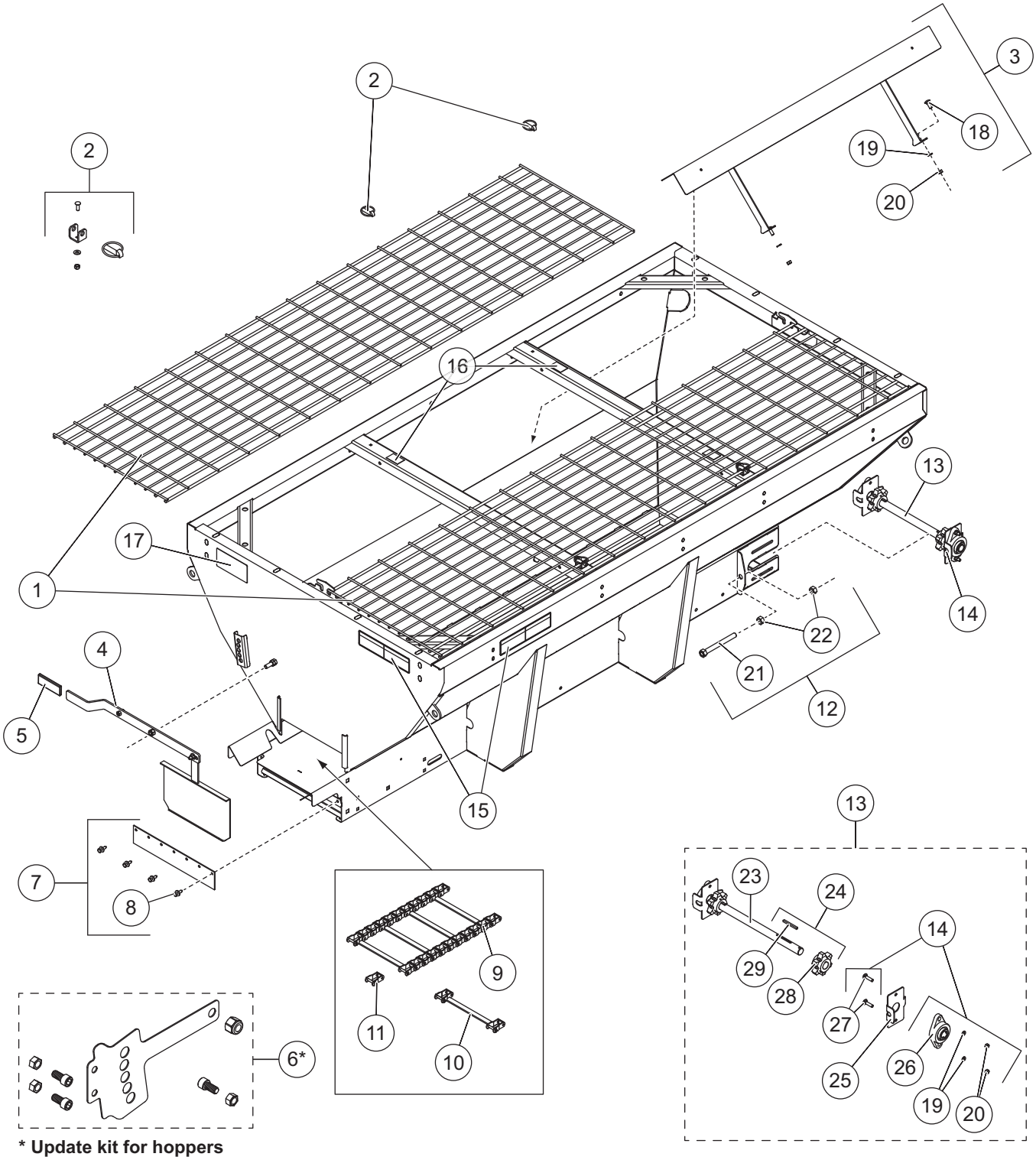

*** Update kit for hoppers without a feed gate lock bracket.**

Hopper Components							
Item	**Part**	**Qty**	**Description**	**Item**	**Part**	**Qty**	**Description**
1	99516	2	Top Screen – 8'	9	68474	1	Pintle Chain (123 links) 9' & 10' Hoppers
	99517	2	Top Screen – 9' Narrow (3.0 yd³)		94898	1	Pintle Chain (108 links) 8' Hopper
	99518	2	Top Screen – 9' Wide (4.5 yd³)	10	68492	1	Conveyor Repair Bar w/Pins & Cotters
	99519	2	Top Screen – 10'	11	68475	1	Conveyor Repair Bar w/Pins & Cotters
2	99578	1	Screen Attachment Kit (pkg of 4)	12	99073	2	Tensioner Bolt Kit
3	99482	1	Inverted V Kit – 8' Hopper	13	99480	1	Idler Shaft Assembly Kit
	99119	1	Inverted V Kit – 9' & 10' Hoppers	14	94953	2	Spreader Bearing Kit
4	99083	1	Feed Gate Assembly	15	68584	2	Label – Warning/Caution, Spreaders
5	99523	1	Rubber Grip, Feed Gate Handle	16	67272	4	Label – Caution, Do Not Lift
6*	90952	1	Feed Gate Update Kit	17	11100	1	Label – Warning, Rear Camera
7	78266	1	Wiper Replacement Kit	ns	68790	1	Ratchet Straps Kit (set of 4)
8	99079	1	Rivet Kit, Steel Hopper Wiper (pkg of 4)				
Item 3			**99482 (8' hopper) / 99119 (9' & 10' hoppers) Inverted V Kits**				
18		6†	3/8-16 x 1 Carriage Bolt SS	20		10‡	3/8-16 Hex Nut SS
19		10‡	3/8 Lock Washer SS			1	Inverted V
Item 12			**99073 Tensioner Bolt Kit**				
21		1	5/8-11 x 6 Take-Up Bolt	22		2	5/8-11 Hex Nut
Item 13			**99480 Idler Shaft Assembly Kit**				
14	94953	1	Spreader Bearing Kit	24	99479	2	6-Tooth Sprocket Assembly
23	94351	1	Idler Shaft	25	99765	2	Bearing Alignment Plate
Item 14			**94953 Spreader Bearing Kit**				
19		2	3/8 Lock Washer SS	26	94536	1	Bearing 1-1/8 ID 2-Bolt Flange
20		2	3/8-16 Hex Nut SS	27		2	3/8-16 x 1-1/2 Carriage Bolt SS
Item 24			**99479 6-Tooth Sprocket Assembly**				
28		1	Drive Sprocket 6T	29	95706	1	1/4 x 2-3/4 Machine Key
SS = Stainless Steel			ns = not shown				G = Grade

* Update kit required when installing replacement feed gate on hoppers without an existing lock bracket.

† Qty 4 for 8' hopper.

‡ Qty 8 for 8' hopper.

Label – Logo, Striker							
			Application				
Part	**Qty**	**Description**	**8' (2.0 yd³)**	**9' (3.0 yd³)**	**9' (4.5 yd³)**	**10' (4.5 yd³)**	**10' (6.0 yd³)**
96997	2	Label – Side Logo, Small	■		■	■	
96999	2	Label – Side Logo, Large		■			■

POWER GROUP – GAS SPREADERS

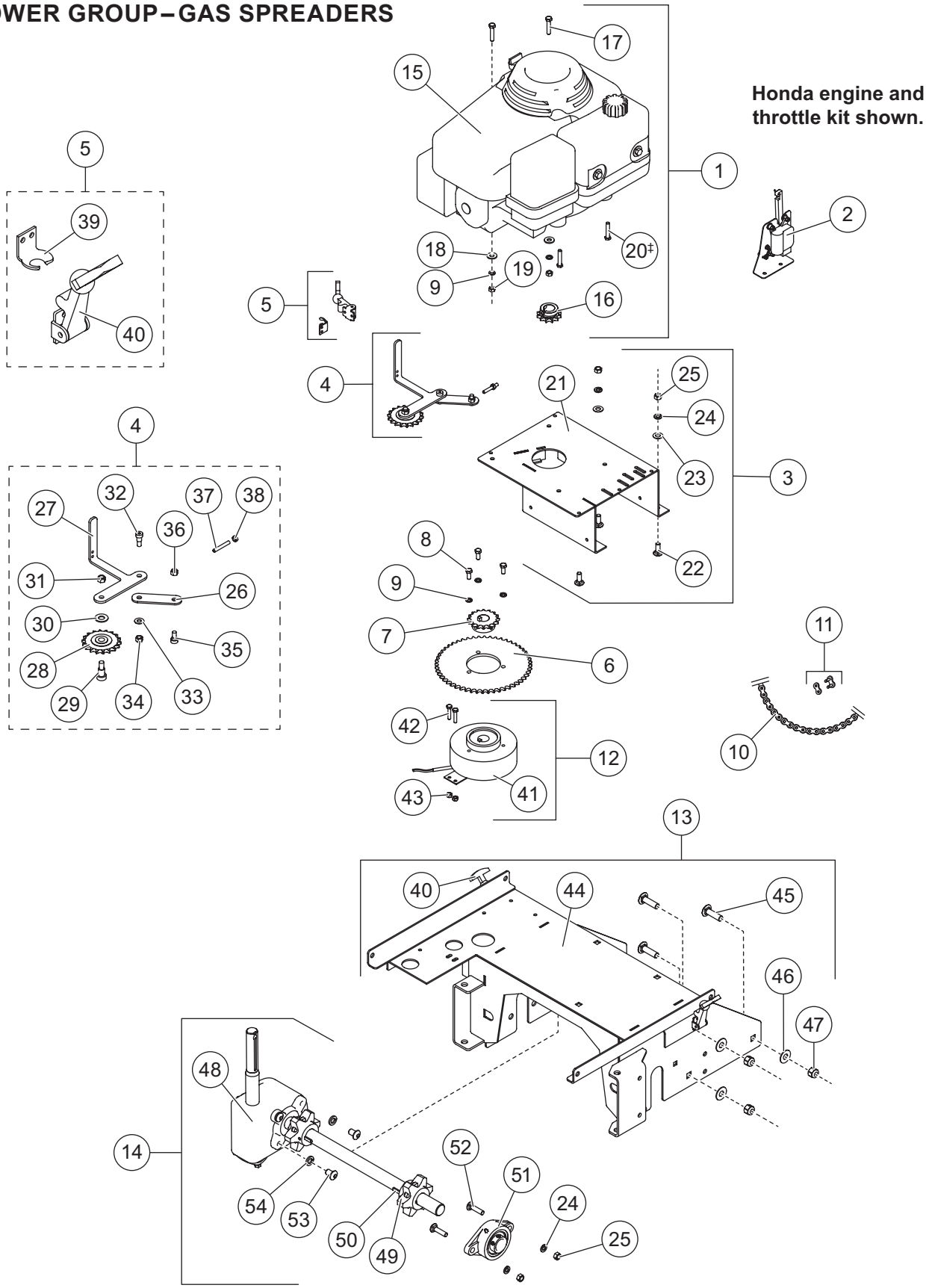

Power Group – Gas Spreaders							
Item	**Part**	**Qty**	**Description**	**Item**	**Part**	**Qty**	**Description**
1	99145	1	Engine Kit – Honda	7	65181	1	Sprocket #40 x 16T x 1 ID
	99147*	1	Engine Kit – Briggs & Stratton	8		3	5/16-18 x 3/4 Hex Cap Screw
2	69781	1	Throttle Control Motor Kit – Honda	9		3	5/16 Lock Washer
	69782*	1	Throttle Control Motor Kit – Briggs & Stratton	10	96518	2	#40 Roller Chain w/Master Link
				11	95894	2	#40 Chain Master Link
3	99128	1	Gas Engine Plate Kit	12	99124	1	Electric Clutch Kit
4	96565	1	Chain Tensioner Kit	13	99148	1	Power Group Base – Gas
5	65224	1	Rubber Strap Hold-Down Kit	14	99117	1	Gear Box Assembly
6	65209	1	Sprocket, Clutch, #40 x 52T				
Item 1			**99145 (Honda) /99147* (Briggs & Stratton) Engine Kit**				
9		4	5/16 Lock Washer SS	17		2†	5/16-18 x 1-1/2 Hex Cap Screw SS
15		1	11 hp Honda Engine	18		2†	5/16 Flat Washer Narrow SS
		1	10.5 hp Briggs & Stratton Engine*	19		2†	5/16-18 Hex Nut SS
16	65214	1	Sprocket #40 x 12T x 1" ID	20‡		2	5/16-24 x 3/4 Hex Cap Screw SS
Item 3			**99128 Gas Engine Plate Kit**				
21		1	Engine Mount	24		4	3/8 Lock Washer SS
22		4	3/8-16 x 1 Carriage Bolt SS	25		4	3/8-16 Hex Nut SS
23		4	3/8 Flat Washer SS				
Item 4			**96565 Chain Tensioner Kit**				
26		1	Tensioner Link 1	33		1	5/16 Flat Washer SS
27		1	Tensioner Link 2	34		1	1/4-20 Hex Locknut GB SS
28		1	Sprocket #40 x 18T x 1/2 ID	35		1	3/8 x 3/16 Shoulder Bolt SS
29		1	1/2 x 5/8 Shoulder Bolt SS	36		1	5/16-18 Hex Locknut Thin SS
30		1	7/16 Flat Washer Wide SS	37		1	1/4-20 x 1-3/4 Set Screw SS
31		1	3/8-16 Hex Locknut Thin SS	38		1	1/4-20 Hex Nut SS
32		1	3/8 x 7/16 Shoulder Bolt				
Item 5			**65224 Rubber Strap Hold-Down Kit**				
39	95590	1	Latch Keeper	40	95591	1	Rubber Latch Assembly
Item 12			**99124 Electric Clutch Kit**				
41		1	Electric Clutch w/Leads	43		2	1/4-20 Hex Locknut GB SS
42		2	1/4-20 x 1-1/4 Hex Cap Screw SS				
Item 13			**99148 Power Group Base – Gas**				
40	95591	2	Rubber Latch Assembly	46		6	1/2 Flat Washer Wide SS
44		1	Gas Power Group Base	47		6	1/2-13 Hex Locknut SS
45		6	1/2-13 x 1-3/4 Carriage Bolt SS				
Item 14			**99117 Gear Box Assembly**				
24		2	3/8 Lock Washer SS	51	94536	1	Bearing 1.125 ID 2-Bolt Flange
25		2	3/8-16 Hex Nut SS	52		2	3/8-16 x 1-1/2 Carriage Bolt SS
48	95567	1	Gear Case	53		4	1/2-13 x 3/4 Button Cap Screw Hex Socket
49	65909	2	Drive Sprocket 6T				
50	95076	2	1/4 x 2-3/4 Machine Key	54		4	1/2 Lock Washer SS
			SS = Stainless Steel				G = Grade

* Not shown.

† Qty 4 for Briggs & Stratton engines.

‡ Used with Honda engines only.

ENGINE COVER ASSEMBLY

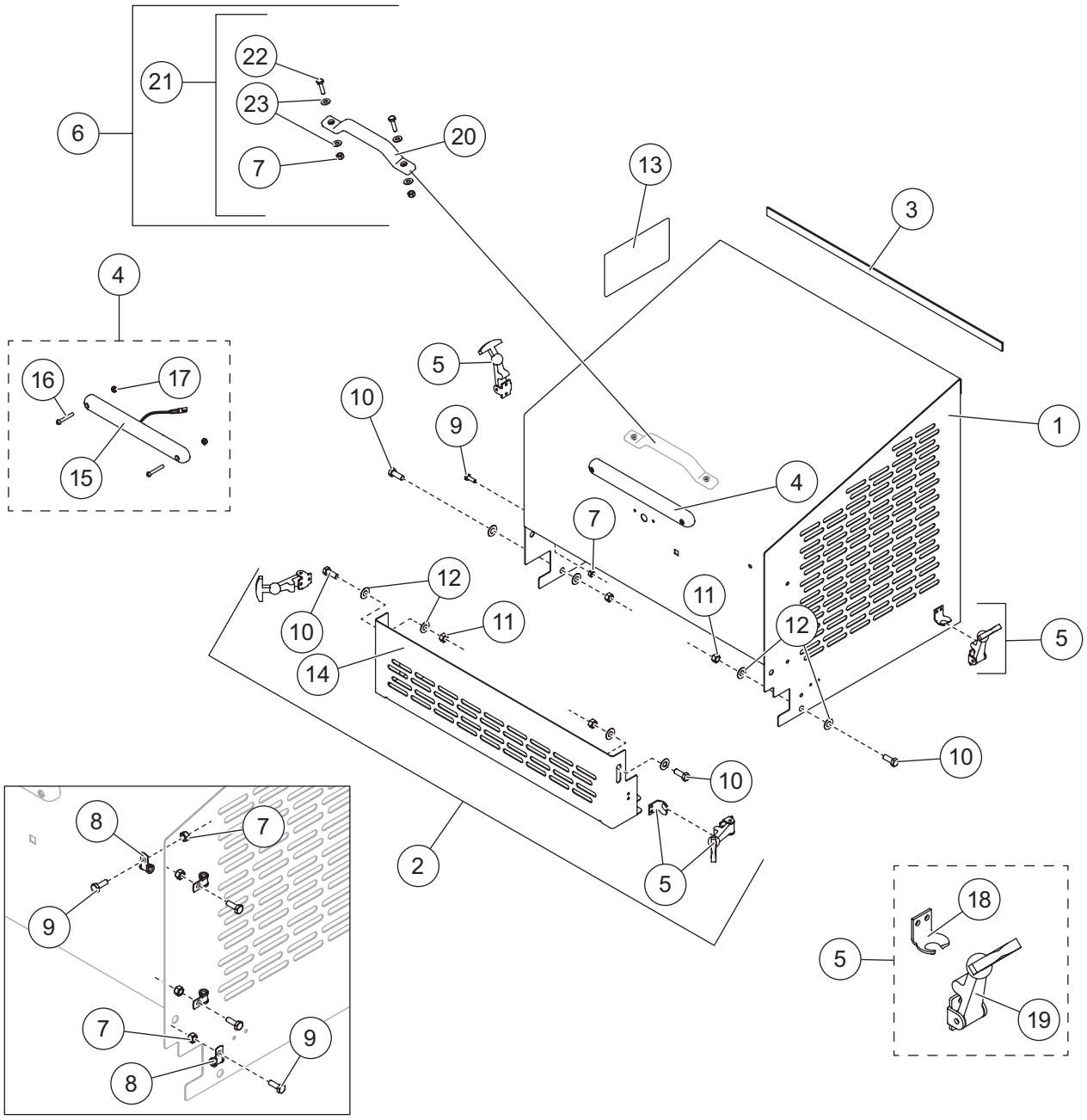

Clamp loop locations inside engine cover

99122 Engine Cover Assembly							
Item	**Part**	**Qty**	**Description**	**Item**	**Part**	**Qty**	**Description**
1	96395	1	Engine Cover	7		6	1/4-20 Hex Locknut GB SS
2	96394	1	Engine Cover Door Kit	8		4	#6 Clamp Loop
3		1	1/8 x 3/4 PVC Foam Strip, Adhesive Back – Black	9		5	1/4-20 x 3/4 Hex Cap Screw SS
				10		4	3/8-16 x 1 Hex Cap Screw SS
4	99080	1	CHMSL Kit	11		2	3/8-16 Hex Locknut GB SS
5	65224	4	Rubber Strap Hold-Down Kit	12		8	3/8 Flat Washer Wide SS
6	99098	1	Plastic Handle Kit	13	65097	1	Label – Warning, Gasoline
Item 2			**96394 Engine Cover Door Kit**				
5	65224	4	Rubber Strap Hold-Down Kit	11		2	3/8-16 Hex Locknut GB SS
7		2	1/4-20 Hex Locknut GB SS	12		4	3/8 Flat Washer Wide SS
9		2	1/4-20 x 3/4 Hex Cap Screw SS	14		1	Spinner Drive Cover
10		2	3/8-16 x 1 Hex Cap Screw SS				
Item 4			**99080 CHMSL Kit**				
15		1	CHMSL w/8" Lead	17		2	#10-32 Hex Locknut GB SS
16		2	#10-32 x 1 Machine Screw				
Item 5			**65224 Rubber Strap Hold-Down Kit**				
18		1	Latch Keeper	19		1	Rubber Latch Assembly
Item 6			**99098 Plastic Handle Kit**				
20		1	Plastic Handle	21		1	Bolt Bag – Plastic Handle Kit
Item 21			**Bolt Bag – Plastic Handle Kit**				
7		2	1/4-20 Hex Locknut GB SS	23		4	1/4 Flat Washer SS
22		2	1/4-20 x 1-1/4 Hex Cap Screw SS				
SS = Stainless Steel				G = Grade			

CHUTE ASSEMBLY

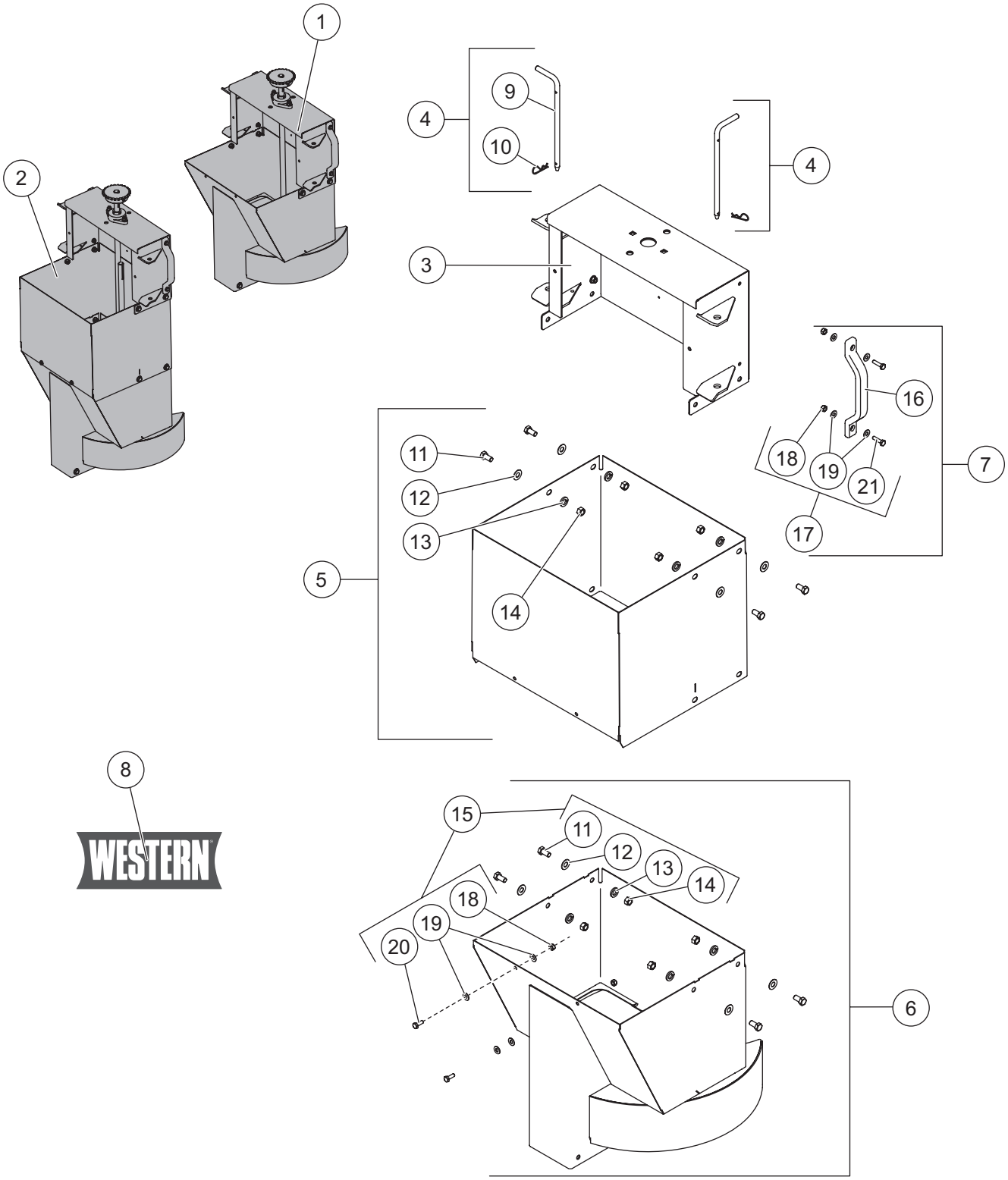

Chute Assembly							
Item	**Part**	**Qty**	**Description**	**Item**	**Part**	**Qty**	**Description**
1	96545*	1	Short Chute Assembly – Complete	5	99531	1	Chute Middle Section Kit
2	99141*	1	Long Chute Assembly – Complete	6	99554	1	Chute Lower Section Kit
3	96385	1	Chute Upper Section	7	99098	2	Plastic Handle Kit
4	99742	1	Chute Attachment Kit (both sides)	8	96996	1	Label – Logo, WESTERN® 13 x 5
Item 4			**99742 Chute Attachment Kit**				
9		2	1/2 x 8-1/4 Chute Pin	10		2	3/32 x 2-1/4 Cotter Pin
Item 5			**99531 Chute Middle Section Kit**				
		1	Chute Extension, Gas	13		4	3/8 Lock Washer SS
11		4	3/8-16 x 3/4 Hex Cap Screw SS	14		4	3/8-16 Hex Nut SS
12		4	3/8 Flat Washer SS				
Item 6			**99554 Chute Lower Section Kit**				
		1	Chute Lower Section	15	99557	1	Bolt Bag – Lower Chute Kit
Item 7			**99098 Plastic Handle Kit**				
16		1	Plastic Handle	17		1	Bolt Bag – Plastic Handle Kit
Item 15			**99557 Bolt Bag – Lower Chute Kit**				
11		4	3/8-16 x 3/4 Hex Cap Screw SS	18		2	1/4-20 Hex Locknut GB SS
12		4	3/8 Flat Washer SS	19		4	1/4 Flat Washer SS
13		4	3/8 Lock Washer SS	20		2	1/4-20 x 3/4 Hex Cap Screw SS
14		4	3/8-16 Hex Nut SS				
Item 17			**Bolt Bag – Plastic Handle Kit**				
18		2	1/4-20 Hex Locknut GB SS	21		2	1/4-20 x 1-1/4 Hex Cap Screw SS
19		4	1/4 Flat Washer SS				
SS = Stainless Steel				G = Grade			

* Includes spinner and shutter assemblies shown on following page. Logo label (item 8) not included.

SPINNER SHAFT, SPINNER & SHUTTER ASSEMBLIES

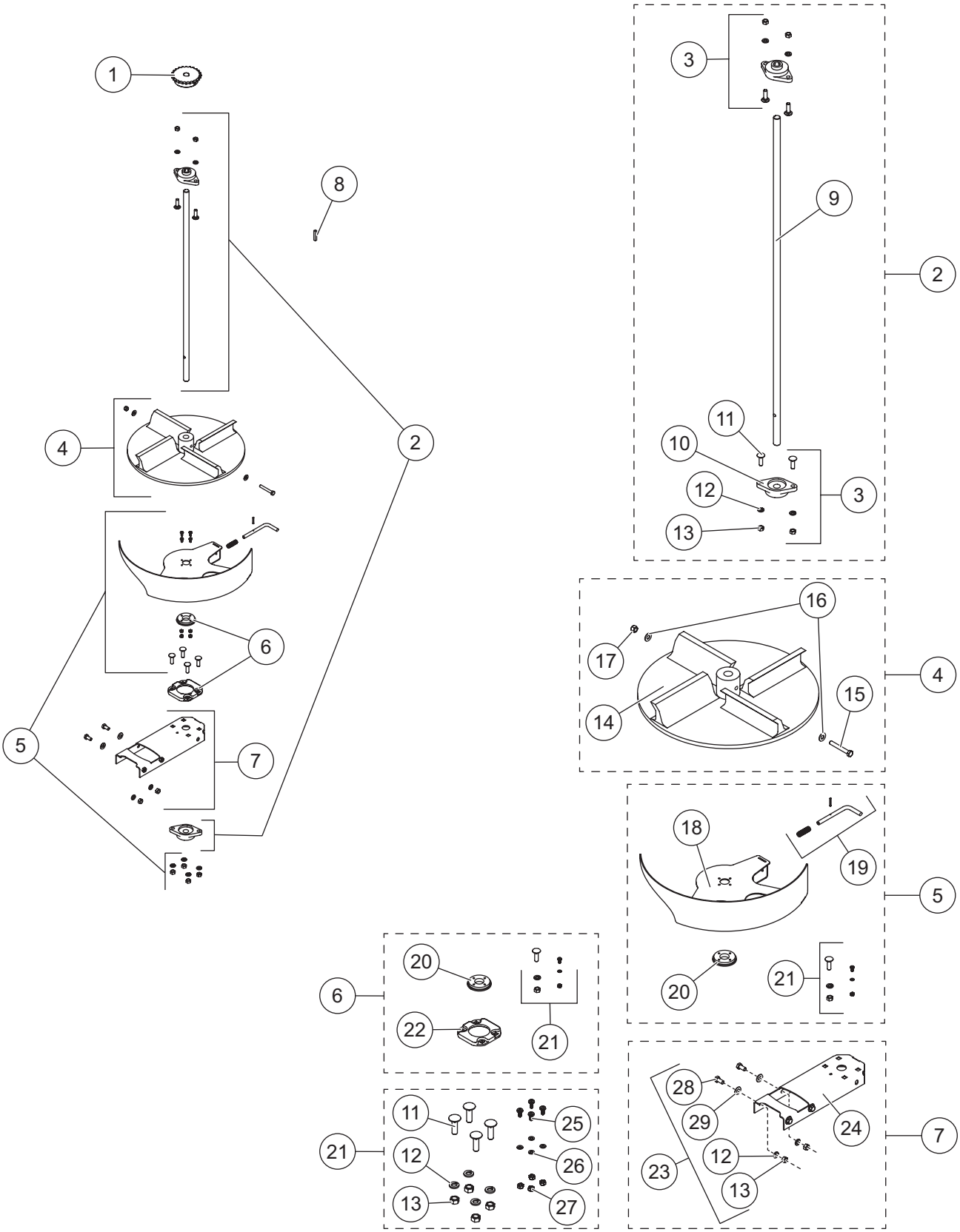

Spinner Shaft, Spinner & Shutter Assemblies							
Item	**Part**	**Qty**	**Description**	**Item**	**Part**	**Qty**	**Description**
1	65193	1	Sprocket #40 x 24T x 3/4 ID	5	99135	1	Shutter Replacement Kit
2	96544	1	Long Spinner Shaft & Bearings Kit	6	96504	1	Chute Shutter Bearing Kit
ns	99573	1	Short Spinner Shaft & Bearings Kit	7	96392	1	Shutter Bearing Support Kit
3	96501	2	Bearing Kit	8	65195	1	3/16 x 1 Machine Key
4	99485	1	Poly Spinner Kit				
Item 2			**96544 Long Spinner Shaft & Bearings Kit – Gas**				
3	96501	2	Bearing Kit	9	99259	1	Spinner Shaft – Long, Gas (43-5/8)
Item 3			**96501 Bearing Kit**				
10	96167	1	Pillow Block Bearing 3/4 Bore	12		2	3/8 Lock Washer SS
11		2	3/8-16 x 1-1/4 Carriage Bolt	13		2	3/8-16 Hex Nut SS
Item 4			**99485 Poly Spinner Kit**				
14		1	Spinner, Black Poly – CW Rotation	16		2	5/16 Flat Washer SS
15		1	5/16-18 x 2-1/4 Hex Cap Screw SS	17		1	5/16-18 Hex Locknut GB SS
Item 5			**99135 Shutter Replacement Kit**				
18		1	Chute Shutter	20		1	Chute Shutter Bearing – Inner
19	96505	1	Shutter Lock Pin Kit	21	99615	1	Bolt Bag – Shutter
Item 6			**96504 Chute Shutter Bearing Kit**				
20		1	Chute Shutter Bearing – Inner	22		1	Chute Shutter Bearing – Outer
21	99615	1	Bolt Bag – Shutter				
Item 7			**96392 Shutter Bearing Support Kit**				
23	96529	1	Bolt Bag – Shutter Bearing Support Kit	24		1	Chute Lower Bearing Support
Item 21			**99615 Bolt Bag – Shutter**				
11		4	3/8-16 x 1-1/4 Carriage Bolt	25		4	#10-32 x 1/2 #2 Pan Head Screw SS
12		4	3/8 Lock Washer SS	26		4	#10 Flat Washer SS
13		4	3/8-16 Hex Nut SS	27		4	#10-32 Hex Locknut GB
Item 23			**96529 Bolt Bag – Shutter Bearing Support Kit**				
12		4	3/8 Lock Washer SS	28		4	3/8-16 x 3/4 Hex Cap Screw SS
13		4	3/8-16 Hex Nut SS	29		4	3/8 Flat Washer SS
			99573 Short Spinner Shaft & Bearings Kit – Gas				
3	96501	2	Bearing Kit	ns	99260	1	Spinner Shaft – Short, Gas (31-5/8)
SS = Stainless Steel			ns = not shown				G = Grade

CAB CONTROL

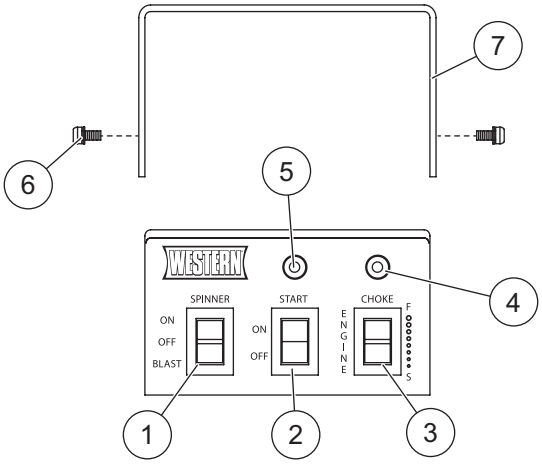

98985 Hopper Spreader Cab Control – 2 Lights							
Item	**Part**	**Qty**	**Description**	**Item**	**Part**	**Qty**	**Description**
1	67532	1	Spinner Clutch Switch	5	99176	1	LED, 12V Panel Mount (green)
2	67533	1	Ignition Switch	6	63930	4	#4-40 x 1/4 Pan Head Machine Screw
3	67534	1	Throttle (choke) Switch	7	65516	1	Control Bracket Installation Kit (includes mounting hardware)
4	99175	1	LED, 12V Panel Mount (red)				

ELECTRICAL COMPONENTS

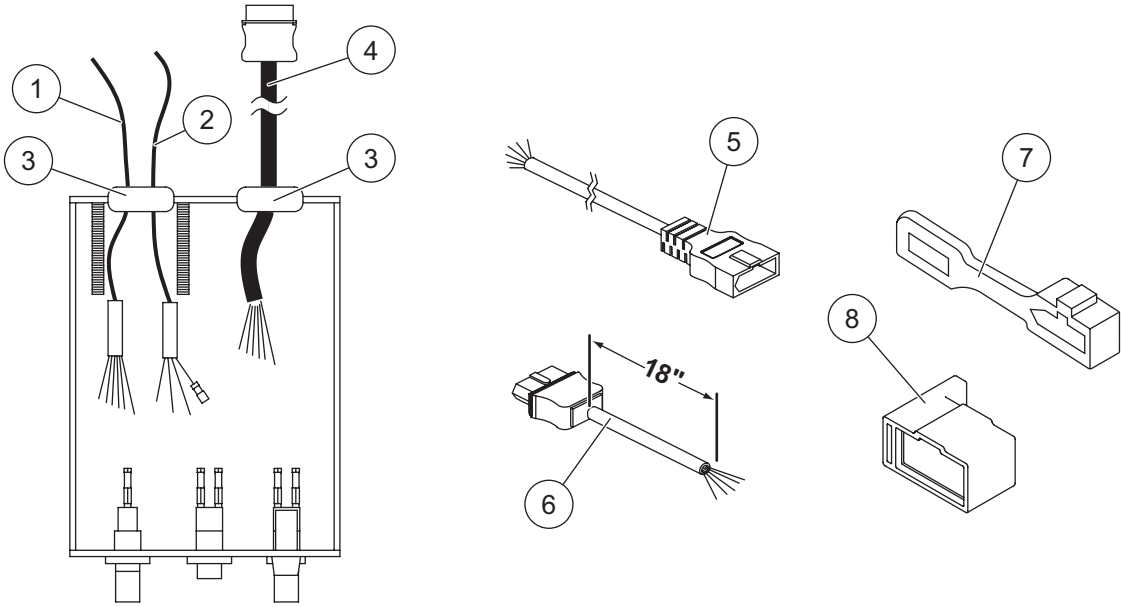

Electrical Components							
Item	**Part**	**Qty**	**Description**	**Item**	**Part**	**Qty**	**Description**
1	67526	1	Control Harness 12V Positive (red)	5	69923	1	Spreader Harness, 11-Pin
2	69922	1	Control Harness Ground (black)	6	63726	1	Vehicle Harness Repair Kit, 11-Pin
3	66130	2	Rubber Grommet, Large	7	61548K	1	Plug Cover Kit
4	69921	1	Vehicle Harness, 11-Pin	8	69916	1	Cable Boot, 8-Pin

ACCESSORIES

Accessory Kits			
Part	**Description**	**Part**	**Description**
99619	Chute Extension Kit, Gas (includes long spinner shaft)	99126	Starter Relay Kit
		65605-4	Battery Tray Kit
99629	Accessory Bracket & Harness Kit, Gas	94680	Vehicle Battery Harness Kit
99686	License Plate Light Kit	99488	Hopper Side Extension Kit
99505-1*	Primary Work Light Kit	92532	Truck Mount Kit, 2 Bars – 8' Hopper
99732-1*	Secondary Work Light Kit	92533	Truck Mount Kit, 3 Bars – 9' & 10' Hoppers
99494*	Strobe Light Kit	99690	Tie-Down Kit SH Chain
76668*	Vibrator Kit		

* Requires installation of 99629 Accessory Bracket & Harness Kit, Gas.

Pre-Wet Kits			
Part	**Description**	**Part**	**Description**
76400	Standard Pump Kit, On-Off System	76425	50-Gallon Tank Kit (2 x 25 gal)
76420	Deluxe Pump Kit, Full-Feature System	76450	100-Gallon Tank Kit (2 x 50 gal)
76405	Pre-Wet Pump Switch Kit		

Western Products
PO Box 245038
Milwaukee, WI 53224-9538
www.westernplows.com

A DIVISION OF DOUGLAS DYNAMICS, LLC

Copyright © 2026 Douglas Dynamics, LLC. All rights reserved. This material may not be used, reproduced, or copied in any manner, in whole or in part, in any printed, mechanical, electronic, film, or other distribution and storage media, nor analyzed or manipulated in any manner for the purpose of training artificial intelligence technologies or systems, without the written consent of Western Products. In accordance with Article 4(3) of the Digital Single Market Directive 2019/790, Western Products expressly reserves this work from the text and data mining exception. Authorization to photocopy items for internal or personal use by Western Products outlets or equipment owner is granted.

Western Products reserves the right under its product improvement policy to change construction or design details and furnish equipment when so altered without reference to illustrations or specifications used. Western Products or the vehicle manufacturer may require or recommend optional equipment for spreaders. Do not exceed vehicle ratings with a spreader. Western Products offers a limited warranty for all equipment and accessories. See separately printed page for this important information. The following are registered (®) trademarks of Douglas Dynamics, LLC: Striker®, WESTERN®.

Printed in U.S.A.